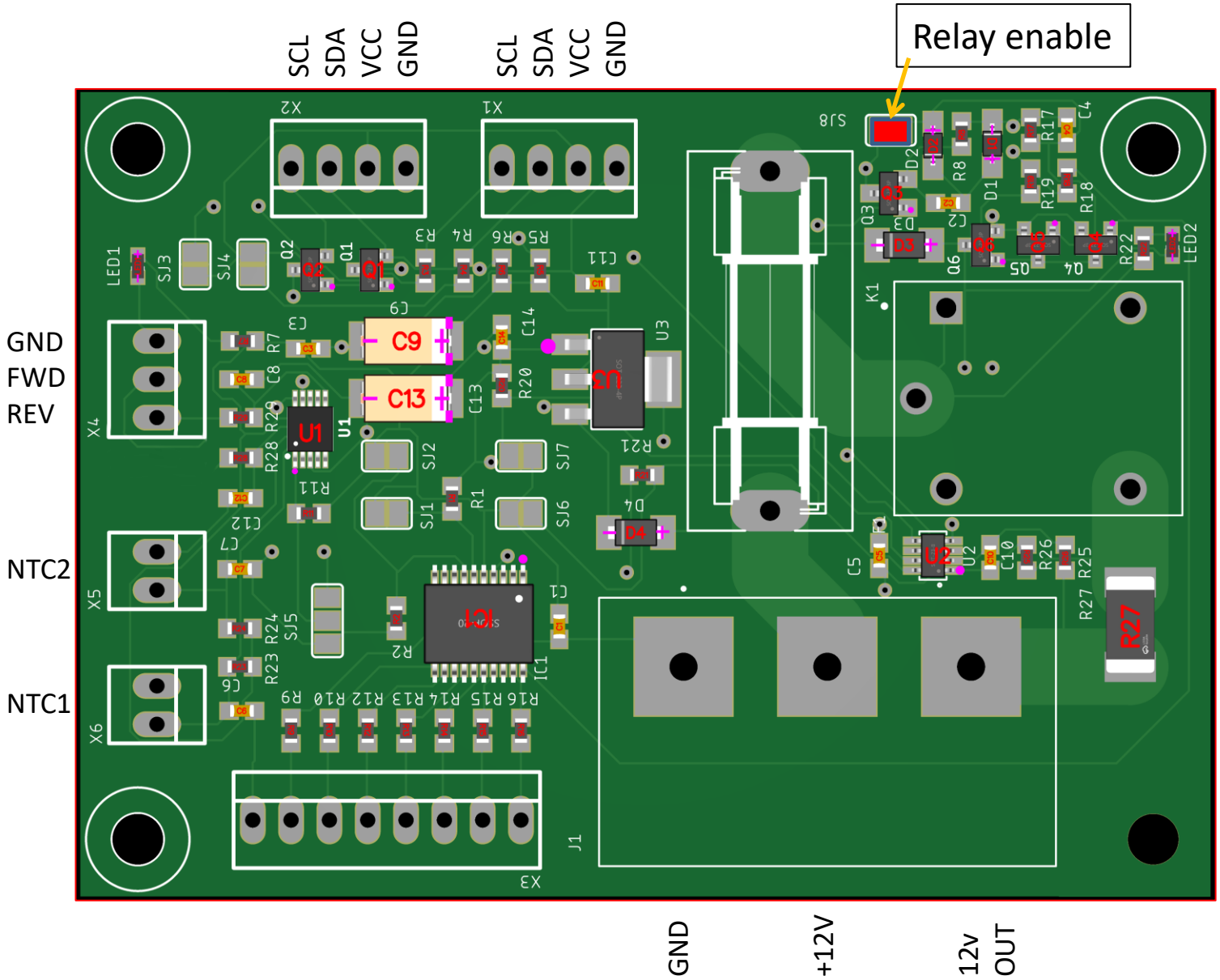
SCL
SDA
VCC
GND
SCL
SDA
VCC
GND
Relay enable
GND
FWD
REV
NTC2
NTC1
GND
+12V
12v
OUT

BOARD 1

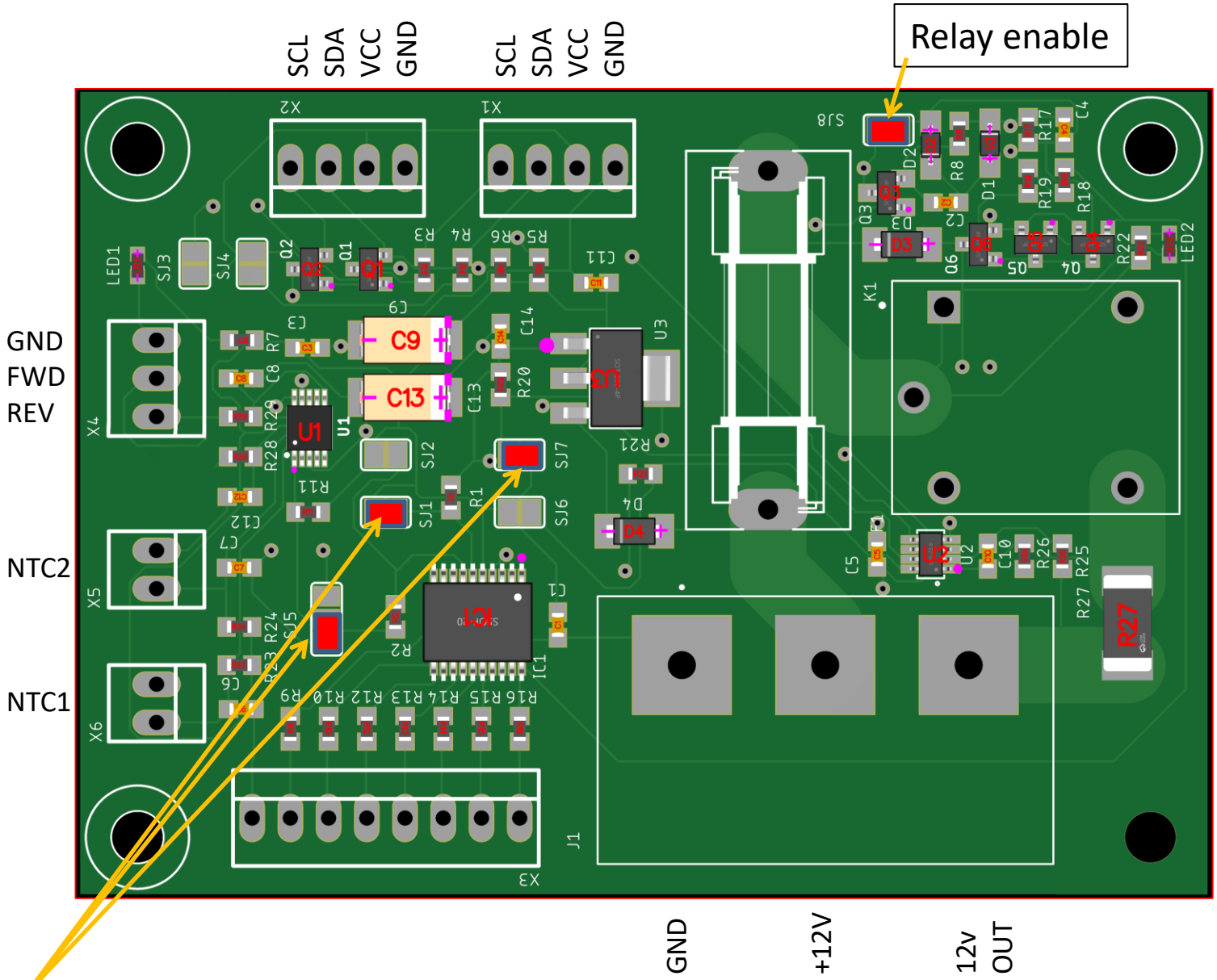
SCL
SDA
VCC
GND
SCL
SDA
VCC
GND
Relay enable
GND
FWD
REV
NTC2
NTC1
GND
+12V
12v
OUT
BOARD 2

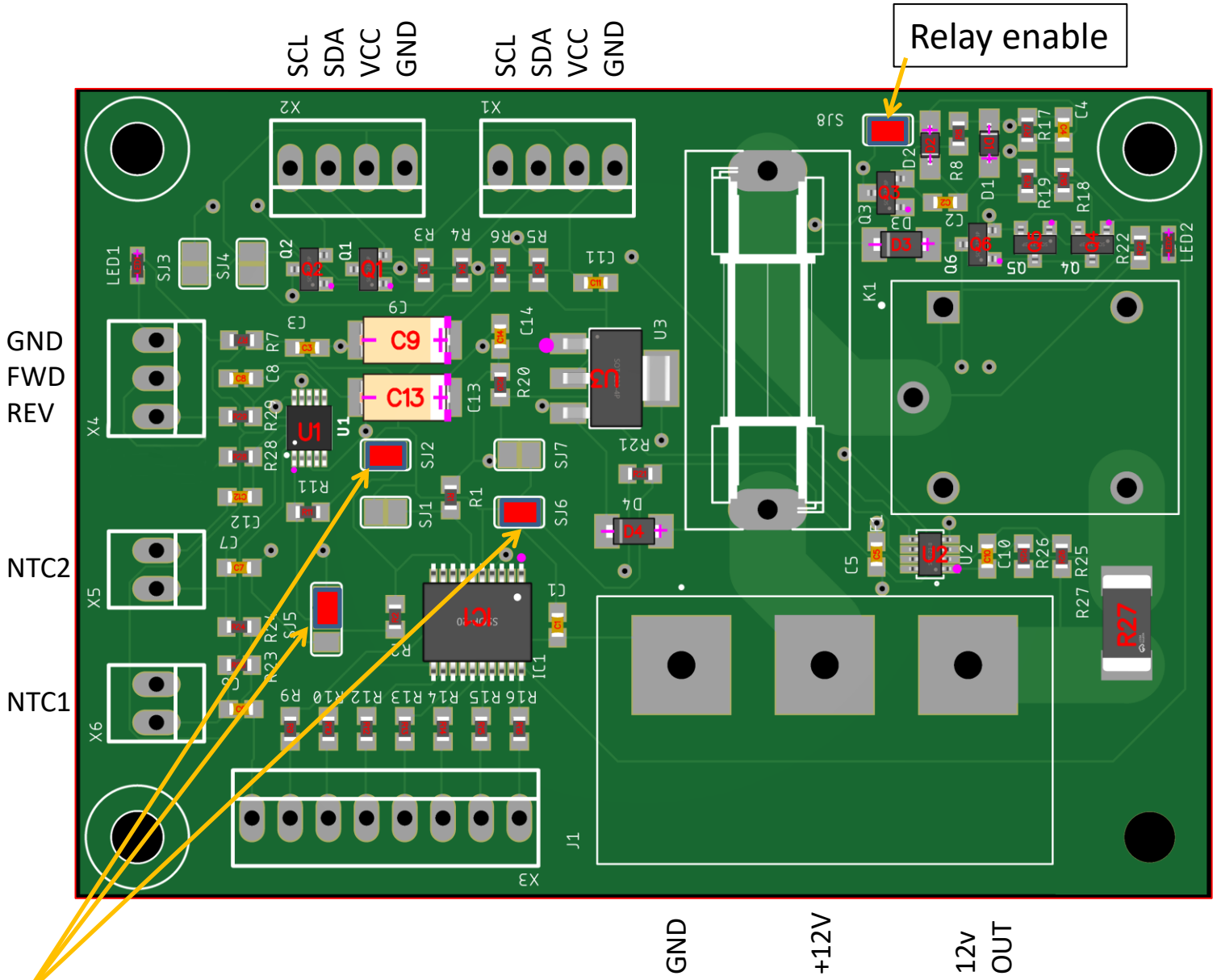
SCL
SDA
VCC
GND
SCL
SDA
VCC
GND
Relay enable
GND
FWD
REV
NTC2
NTC1
GND
+12V
12v
OUT

BOARD 3